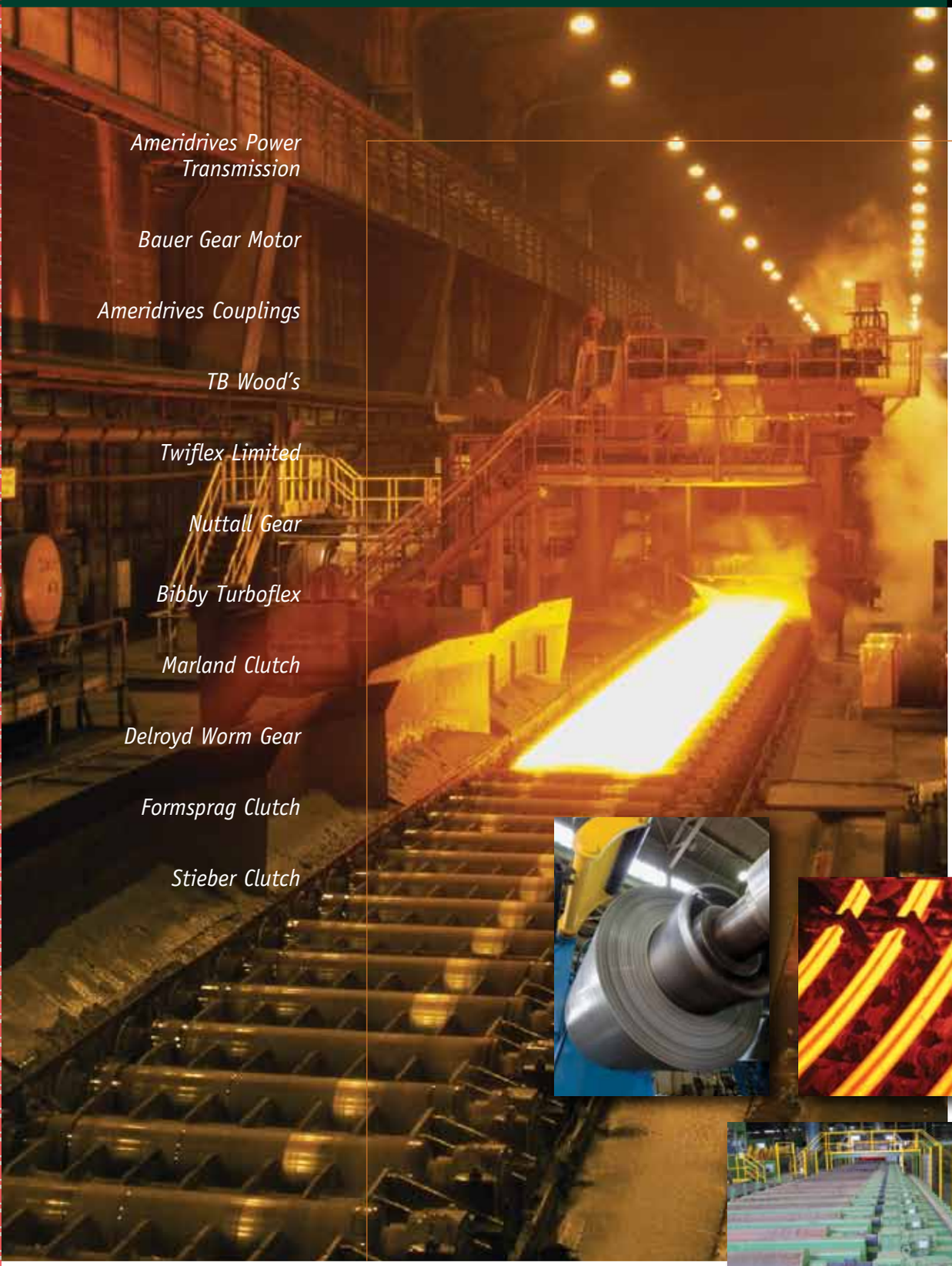

Ameridrives Power Transmission

Bauer Gear Motor

Ameridrives Couplings

TB Wood's

Twiflex Limited

Nuttall Gear

Bibby Turboflex

Marland Clutch

Delroyd Worm Gear

Formsprag Clutch

Stieber Clutch

Power Transmission Solutions for the **Metal Producers Market**

Altra® Industrial Motion

Altra Industrial Motion
provides power transmission solutions for metal producers

As industry leaders in electromechanical power transmission products, the companies of Altra Industrial Motion have been helping metal mill equipment manufacturers and metal producers worldwide achieve great success by increasing their efficiency while at the same time reducing their costs and downtime. Altra engineered power transmission products are installed in a wide array of mill applications including blast furnaces, continuous casters, roughing mills, finishing mills, cold mills and coilers.



Altra companies provide a comprehensive offering of mill spindles, couplings, U-joints, gear motors, speed reducers, brakes, torque-limiting devices and backstopping clutches to meet the specific needs of the metal mill industry. Altra products are designed to withstand harsh mill environments including dirt, dust and high temperatures, while providing exceptional personnel safety and equipment protection.

The companies of Altra Industrial Motion offer advanced technologies together with unparalleled engineering capability. Our experienced mill application engineers analyze every application challenge in order to provide the optimal power transmission solutions for our customers.

To help mills control inventories, Altra teams work hard to achieve short lead times and on-time deliveries. Our products are designed to reduce downtime throughout a mill by meeting the requirements for long service intervals, easy maintenance and fast interchanges.

For more information about application-specific power transmission solutions for the metal mills from Altra Industrial Motion, including case studies and literature, visit:

www.AltraMetalProducers.com

Altra offers a full drivetrain solution to keep metal mills running efficiently... worldwide.

Couplings and Shaft Locking Devices

Slab and strip quality and thickness control can be influenced by the performance of a mill's universal joints and mill drive gear spindles. Major mills rely on Altra's innovative mill spindle advanced gearing technology and operating efficiency to keep their mills running smoothly. Altra U-joints feature swing diameters up to 1200 mm to provide exceptional endurance and reduced vibration on metal shredders, continuous casters and roughing, finishing, cold and pipe mills worldwide. Durable shaft locking devices and gear couplings are used on variety of mill equipment. Altra elastomeric couplings are often found on roller table applications due to their superior environmental performance.

ALTRA COUPLINGS: Ameridrives Couplings • Ameridrives Power Transmission TB Wood's • Bibby Turboflex

Gear Motors and Enclosed Gearing

As the leading innovator of worm and helical gear technologies, Altra continues to improve product performance by developing features, designs and custom-engineered solutions to meet the demands of the metal mills market. Altra offers a full range of geared motor solutions for various applications throughout metal mills including a model specifically designed for use on roller tables. Altra custom-designed speed reducers and gear motors are built for rugged duty on all types of mill stands, recoilers, straighteners, levelers, flatteners, slitters, shears and scrap choppers.

Bauer Gear Motor • Delroyd Worm Gear • Nuttall Gear

Clutches and Brakes

Twiflex caliper brakes are typically found on cranes and hoists, processing lines, coke barrel reclaimers, and various rail car applications. Altra backstops and CECON overrunning clutches are utilized to prevent backward rotation during power-off situations on iron ore, coal coke and scrap conveyors. Heavy-duty water-cooled brakes from Wichita are designed for continuous slip tension applications such as coilers and recoilers, and their clutches are frequently used on presses and shear drives.

Twiflex Limited • Marland Clutch • Wichita Clutch • Formsprag Clutch

Belted Drives and Torque Limiters

Rugged TB Wood's sheaves and V-belts are utilized on certain types of large metal shredders as well as cranes and conveyors. TB Wood's also provides unmatched made-to-order capabilities accommodating special drive requirements. TB Wood's variable speed sheaves incorporate a proven lubrication system that eliminates fretting, corrosion, freezing, and sticking. Exclusive cam followers exert side wall pressure on the belt in proportion to the torque required to carry the load. Bibby Torque Limiters, with up to 95% torque setting accuracy, are also found in many metals applications including divide shears, torque limiter with brake discs, plate turnover devices, crop shear drives, mill drive shears, tube mill drives and high speed rod mill drives.

TB Wood's • Bibby Turboflex

Ovens & Furnaces

Iron Ore, Coal, Coke and Scrap Conveyors

Marland backstops and CECON clutches are found on horizontal and incline conveyors that feed coal to coke ovens and iron ore and coke to blast furnaces. Backstops are also utilized on conveyors that feed metal scrap from shredders to electric arc furnaces.

Marland Clutch BCMA backstops and CECON clutches

Nuttall Gear Helical speed reducers

Ameridrives Amerigear® couplings (AGMA)

Bibby Turboflex Series III couplings and modular torque limiters

Bauer Gear Motor BF Series shaft-mounted gear motors

Ameridrives Ameriloc® shaft locking devices

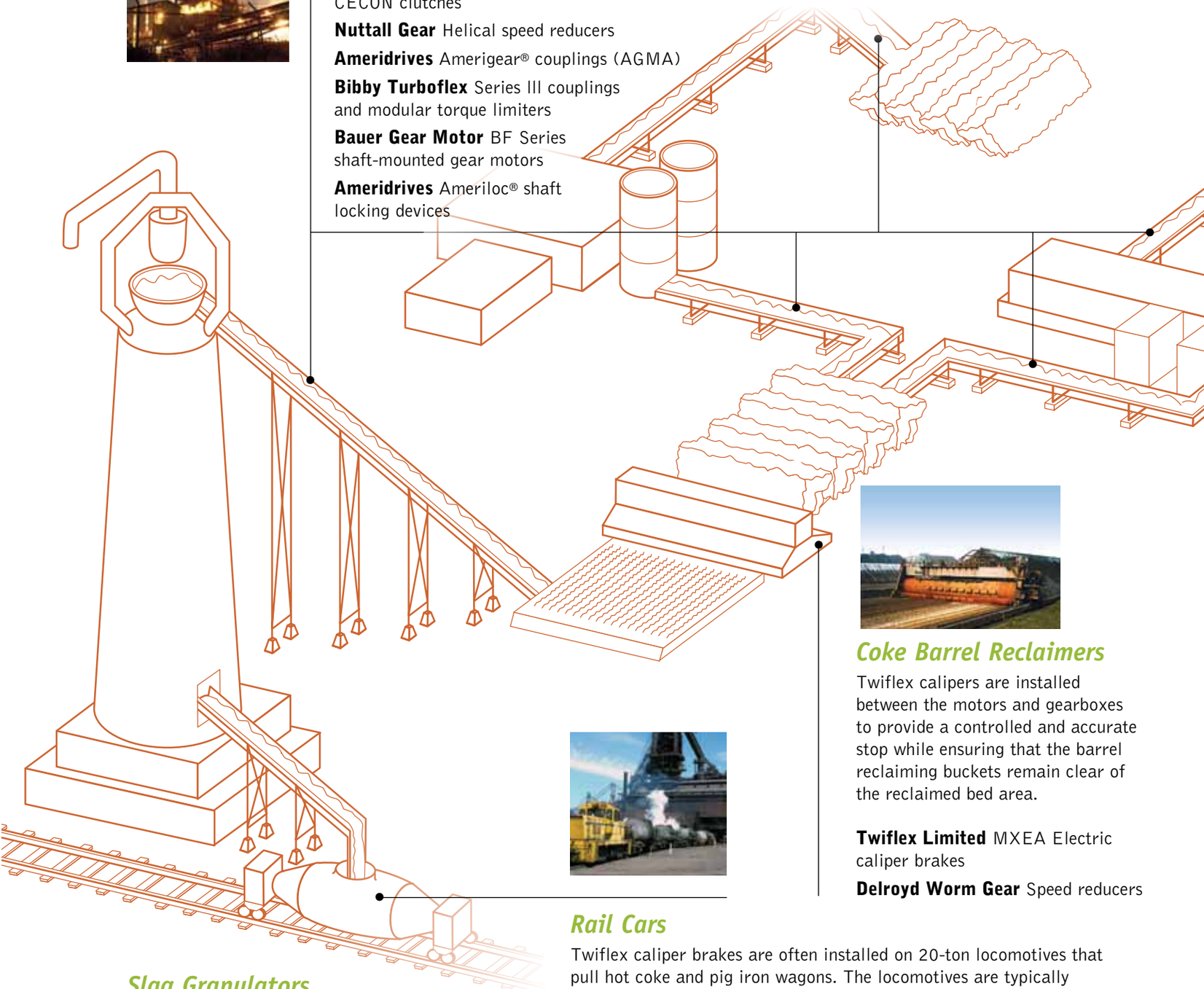

Coke Barrel Reclaimers

Twiflex calipers are installed between the motors and gearboxes to provide a controlled and accurate stop while ensuring that the barrel reclaiming buckets remain clear of the reclaimed bed area.

Twiflex Limited MXEA Electric caliper brakes

Delroyd Worm Gear Speed reducers

Rail Cars

Twiflex caliper brakes are often installed on 20-ton locomotives that pull hot coke and pig iron wagons. The locomotives are typically controlled electrically through the drive motor, but in the event of an emergency or power failure, the brake calipers are applied to safely stop the wagon.

Twiflex Limited Hydraulic brake calipers

Nuttall Gear Helical speed reducers

Delroyd Worm Gear Speed reducers

Ameridrives Power Transmission Americardan 5000 & 3000 universal joints

Bauer Gear Motor BF Series shaft-mounted gear motors and BG Series helical in-line gear motors

Slag Granulators

Custom-designed, heavy-duty Nuttall Gear reducers are often installed on slag granulator system creep drives.

Nuttall Gear Slag granulator drives

Shredders, Shears and Choppers

Shredders

Ameridrives Power Transmission provides state-of-the-art universal joint technologies including innovative torque overload designs and integrated shaft locking devices used on rotary metal shredder applications. TB Wood's V-belts and sheaves combined with Wichita clutches featuring high energy, high temperature friction linings are often found on natural gas powered shredders.

Ameridrives Power Transmission Americardan 5000 & 3000 Series universal joints

Wichita Clutch Standard vent clutch

TB Wood's Classical & narrow V-belt sheaves, QT Power Chain® II belt drive system

Ameridrives Amerigear® couplings (AGMA)

Bibby Turboflex Series III couplings and modular torque limiters

Ameridrives Ameriloc® shaft locking devices

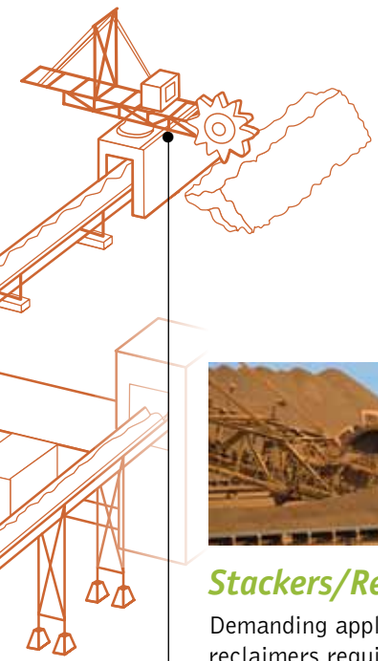

Stackers/Reclaimers

Demanding applications like stacker/reclaimers require highly reliable brakes, high torque couplings and U-joints, torque limiters, and specialized enclosed gearing solutions. The bucket wheel is driven by an electric motor connected to a helical gear reducer via a high speed coupling. Large cooling fan system drives utilize enclosed helical gearing. Formsprag backstops are included to prevent reverse rotation of conveyors.

Ameridrives Amerigear® couplings (AGMA)

Delroyd Worm Gear Speed reducers

Formsprag Clutch LLH holdbacks

Marland Clutch BCMA holdbacks

Nuttall Gear Helical speed reducers

Twiflex Limited GMR-SD spring applied, air released caliper brakes

Bauer Gear Motor BF Series shaft-mounted gear motors and BG Series helical in-line gear motors

TB Wood's G-Flex grid couplings

Industrial Clutch LKB spring set, air released brakes

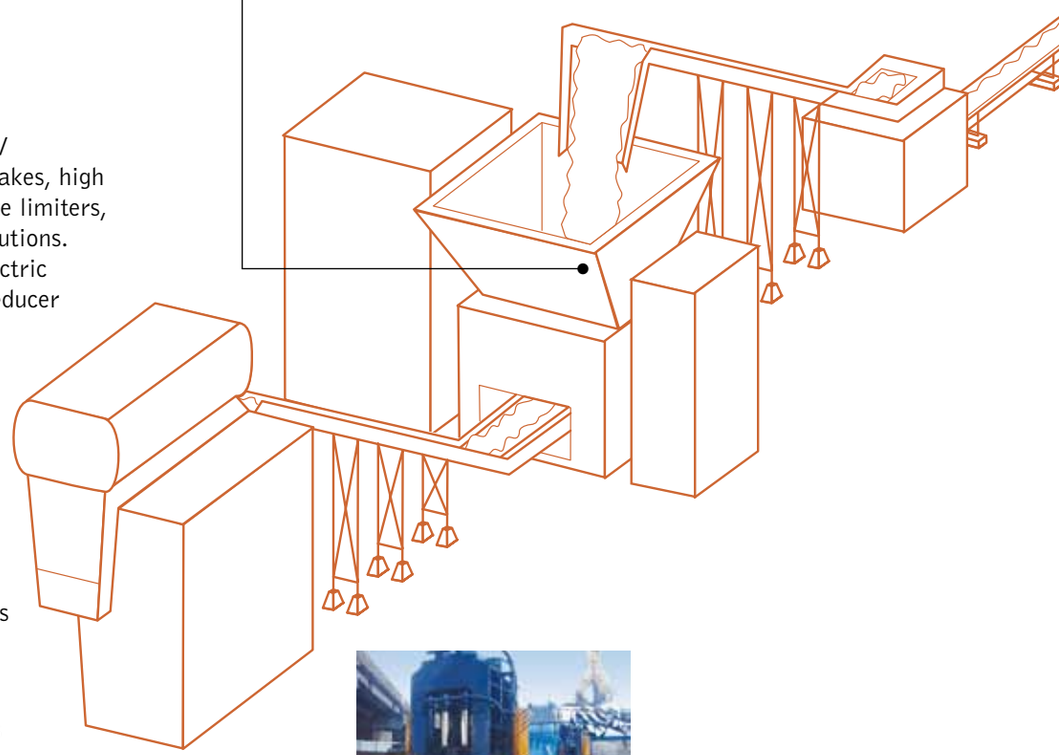

Scrap Shears and Choppers

Nuttall Gear provides reducers in engineered package assemblies specifically for use on scrap shears and chopper drives and conveyors.

Nuttall Gear "Zero" or "Limited" backlash drives and TDS/HPD parallel shaft and Moduline® concentric shaft reducers

Bibby Turboflex Series III couplings and modular torque limiters

Ameridrives Amerigear® couplings (AGMA)

Cranes, Hoists and Winches

Ladle Hood Winches

Heavy-duty calipers, released by hydraulic pressure, are often utilized to provide control when raising and lowering ladle hoods. The units are installed on the winch barrel to primarily serve as emergency brakes. The calipers also lock and hold the winch drum when the driving motor is de-energized.

Twiflex Limited VCS spring-applied caliper brakes

Delroyd Worm Gear Speed reducers

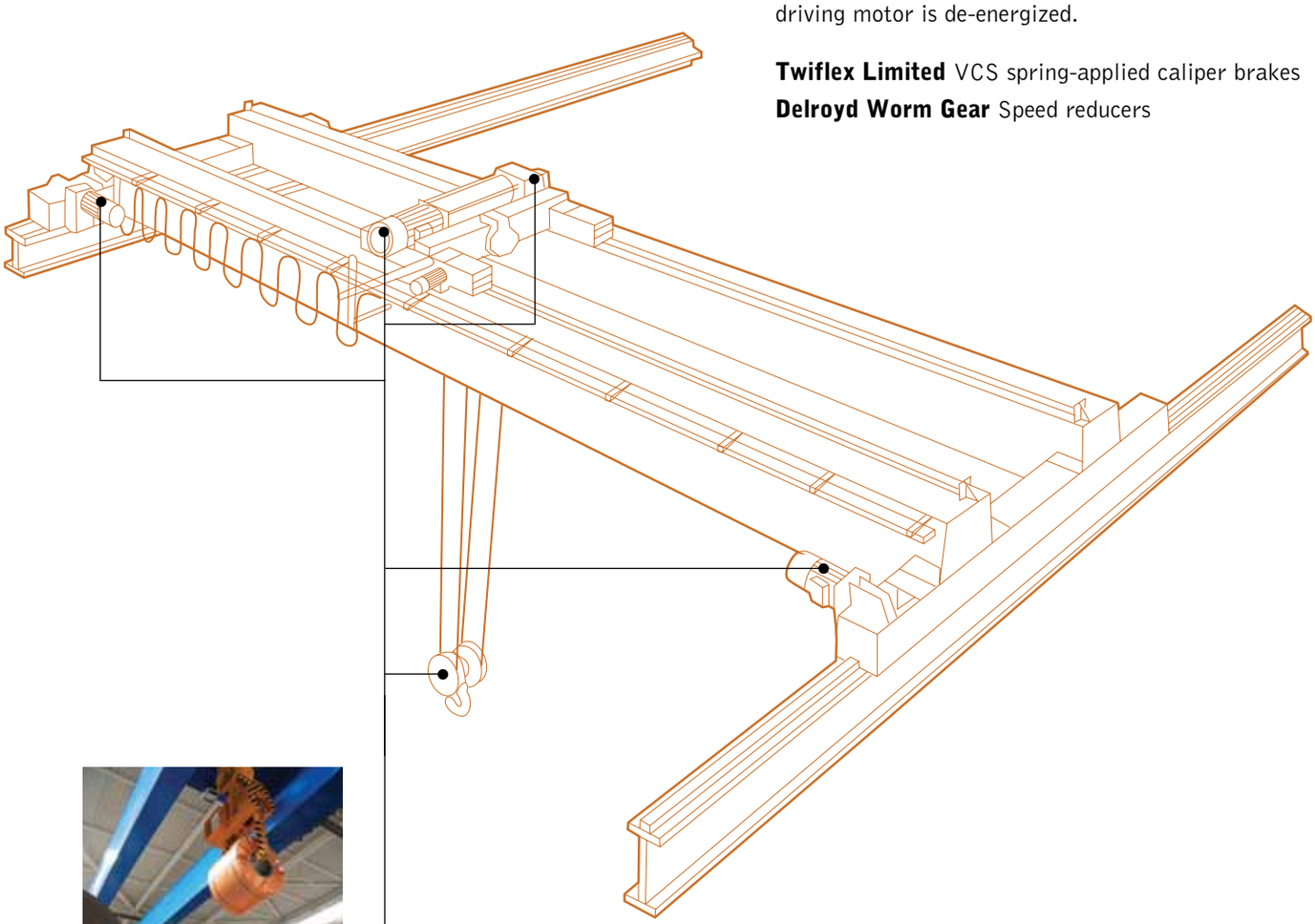

Cranes and Hoists

Bauer Gear Motors and Ameridrives Amerigear couplings are often used on overhead traveling bridge crane drives with torque capacity <18,500 Nm. Warner Electric ERD brakes are typically utilized for parking and emergency stopping on travel drives and holding on main hoist drives with torque capacity <10,000 Nm (7,325 ft.lbs.), 250-500 kW. Twiflex caliper brakes perform the same functions on overhead bridge cranes, including ladle hood winches, with capacity >10 tons. TB Wood's sheaves are used in upper and lower blocks.

Bauer Gear Motor BF Series shaft-mounted gear motors

Ameridrives Amerigear® couplings (AGMA)

Bibby Turboflex Series III couplings

Twiflex Limited Spring-applied Type VCS caliper brakes, MXEA Electric caliper brakes

Warner Electric ERD/ERDD VAR and ERD/ERDD Gen2 spring-operated, electromagnetically released brakes

Delroyd Worm Gear Speed reducers

TB Wood's V-belt sheaves

Ameridrives Power Transmission Americardan C Series wing bearing universal joints

Continuous Casters

Continuous Casters

Ameridrives Power Transmission universal joints are known throughout the industry for their reliable performance in continuous caster applications. A new integral key or face pad design for the drive end of the universal joints provides a more secure connection which prevents shifting and premature wear on segment rollers and bearings. In continuous casters, the inclined conveyor that is providing the raw material must not stop once the process is started so usually a dual drive is used to power the conveyor to assure uninterrupted flow of material into the caster. Formsprag and Marland overrunning clutches are used to connect the dual drives to the conveyor and Formsprag and Marland backstops are used to prevent the conveyor from running backwards when stopped.

Ameridrives Power Transmission Americardan 5000 & 3000 Series universal joints

Ameridrives Amerigear SF & SL Series mill spindles

Bauer Gear Motor BG Series helical geared motors and BF Series shaft-mounted geared motors

Delroyd Worm Gear Speed reducers

TB Wood's Dura-Flex® couplings

Marland Clutch BCMA holdbacks

Formsprag Clutch LLH holdbacks and overrunning clutches

Bibby Turboflex Modular torque limiters

Ameridrives Ameriloc® shaft locking devices

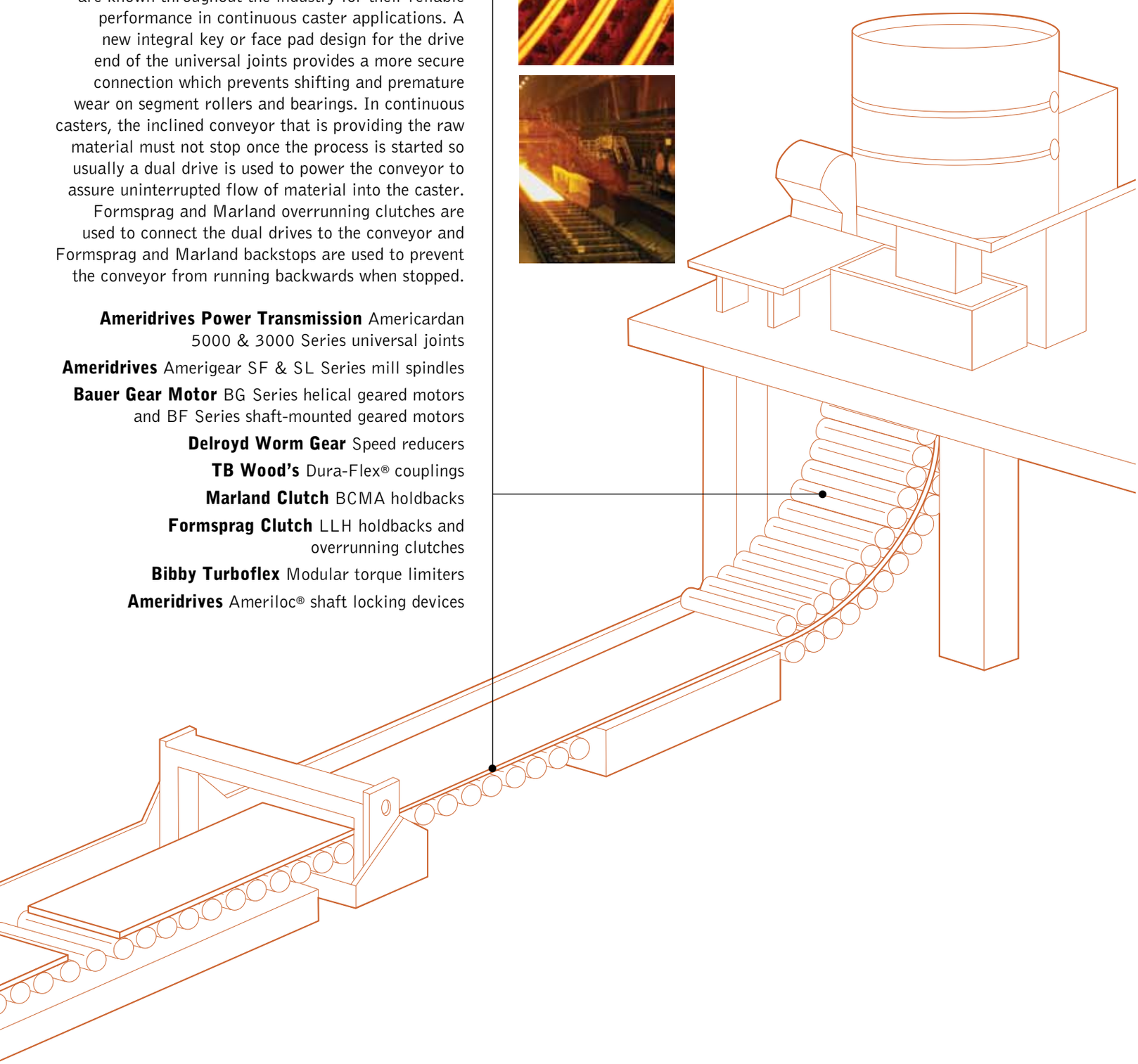

Hot Rolling Mills

Descaling Pumps

Custom-designed Nuttall Gear high-torque drives are often installed on high horsepower water pumps utilized on descaling equipment.

Nuttall Gear Descaling pump drives

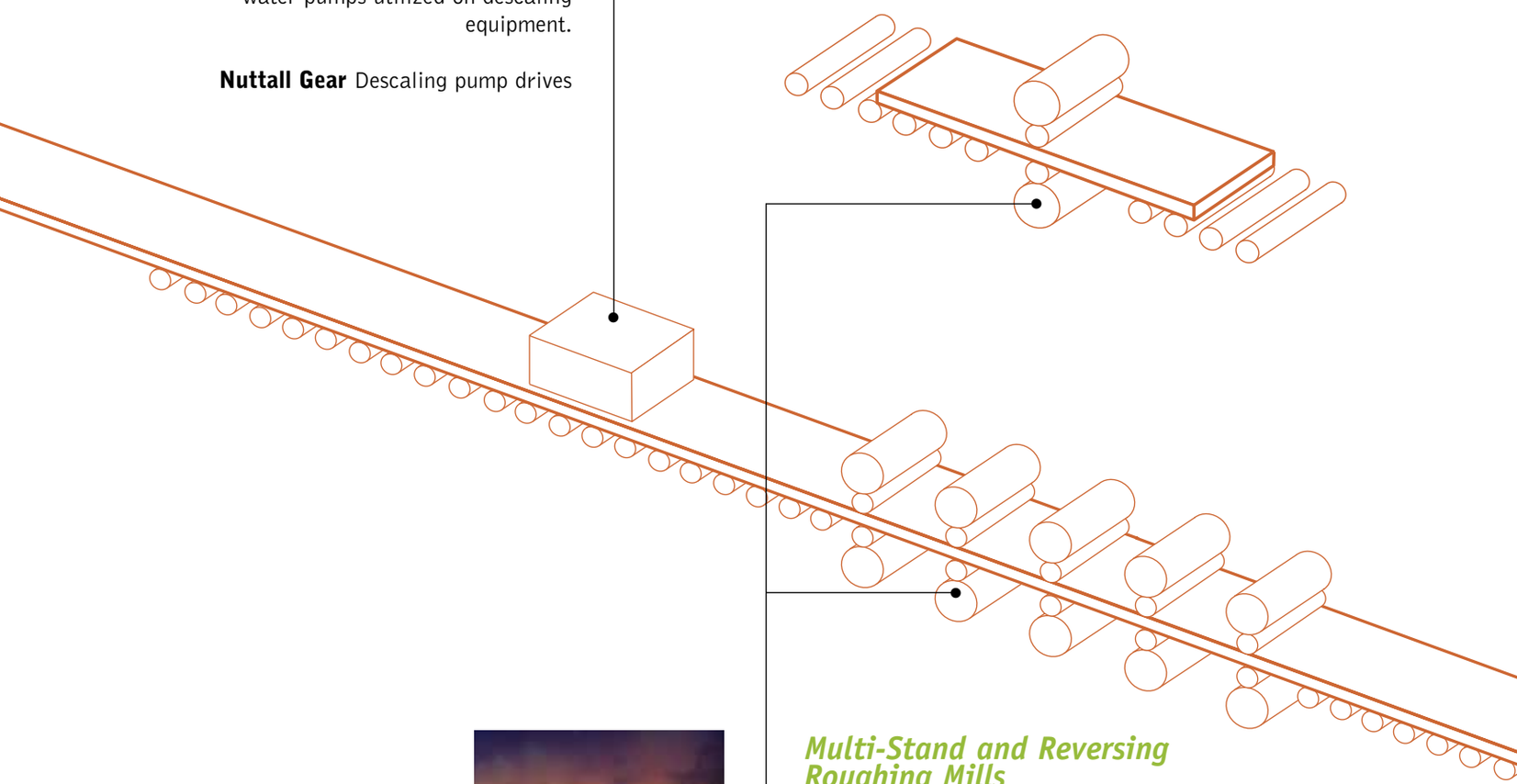

Multi-Stand and Reversing Roughing Mills

High torque capacity Ameridrives SM Series mill spindles and robust Nuttall Gear pinion mill stand drives are designed to provide long-lasting service in tough mill environments. Ameridrives Power Transmission universal joints and Ameriloc shaft locking devices are also utilized.

Ameridrives Amerigear® couplings (AGMA) and Amerigear SM Series mill spindles

Ameridrives Power Transmission Americardan 5000 & 3000 Series universal joints

Nuttall Gear Pinion and twin pinion mill stand drives

Bibby Turboflex Series III couplings and modular torque limiters

Delroyd Worm Gear Mill stand screwdowns and adjustment drives

Ameridrives Ameriloc® shaft locking devices

Roller Tables

Bauer offers a geared motor that is specifically designed for the heavy shock loads of mill roller table applications. The units feature grey cast iron gearbox and motor housings, a reinforced fan, high temperature seals, a heavy duty fan cover, and a motor design with circular fins as an option. TB Wood's Dura-Flex elastomeric couplings are often mounted between the drive motors and table rollers. The couplings provide superior fatigue resistance in tough steel mill environments. Units are easy to assemble, have a high operating temperature and are moisture and chemical resistant.

Bauer Gear Motor BF Series shaft-mounted gear motors

TB Wood's Dura-Flex® couplings (AGMA)

Ameridrives Amerigear® couplings

Delroyd Worm Gear Speed reducers

Nuttall Gear TDS/HPD parallel shaft and Moduline® concentric shaft reducers

Bibby Turboflex Series III couplings and modular torque limiters

Finishing Mills

Ameridrives Power Transmission universal joints and Ameridrives SM Series mill spindles are designed for long-lasting performance in heavy-load, continuous-duty rolling mill applications. The spindles feature Ameridrives fully-crowned advanced gear tooth design. Units can accommodate high misalignment angles due to the constant change in material thickness, roll size and roll change requirements. Caliper brakes and pinion mill stand drives are also used.

Ameridrives Power Transmission Americardan 5000 & 3000 Series universal joints

Ameridrives Amerigear® couplings (AGMA) and Amerigear SM Series mill spindles

Twiflex Limited MX pneumatic caliper disc brakes

Nuttall Gear Pinion and twin pinion mill stand drives

Bibby Turboflex Series III couplings and modular torque limiters

Delroyd Worm Gear Mill stand screwdowns and adjustment drives

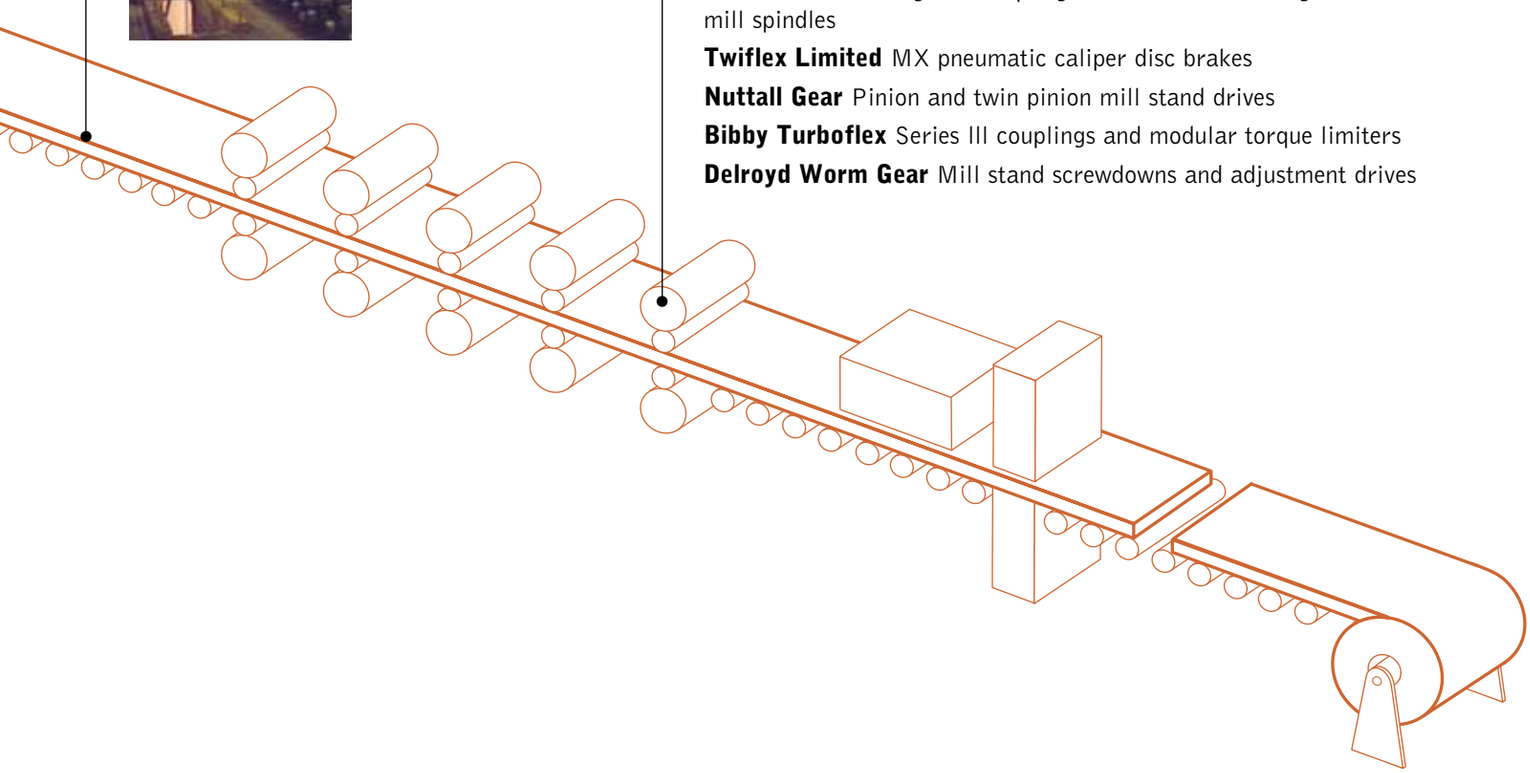

Bar Mills

Multi-Stand Roughing Mills

High torque capacity Ameridrives SM Series mill spindles and robust Nuttall Gear pinion mill stand drives are designed to provide long-lasting service in tough mill environments. Ameridrives Power Transmission universal joints and Ameriloc shaft locking devices are also utilized.

Ameridrives Amerigear® couplings (AGMA) and SM Series mill spindles

Ameridrives Power Transmission Americardan 5000 & 3000 Series universal joints

Nuttall Gear Pinion and twin pinion mill stand drives

Bibby Turboflex Series III couplings and modular torque limiters

Delroyd Worm Gear Mill stand screwdowns and adjustment drives

Ameridrives Ameriloc® shaft locking devices

Descaling Pumps

Custom-designed Nuttall Gear high-torque drives are often installed on high horsepower water pumps utilized on descaling equipment.

Nuttall Gear Descaling pump drives

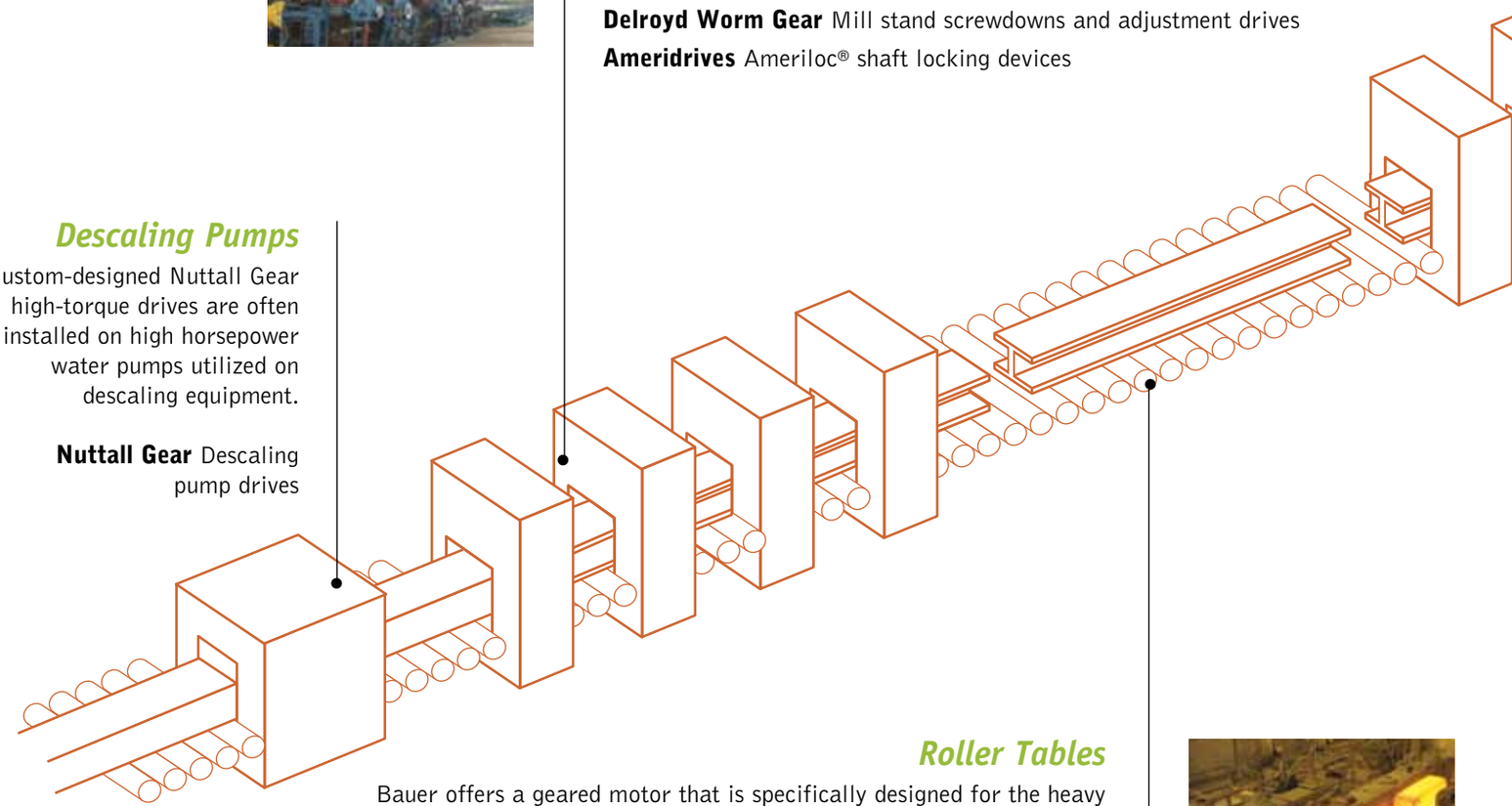

Roller Tables

Bauer offers a geared motor that is specifically designed for the heavy shock loads of mill roller table applications. The units feature grey cast iron gearbox and motor housings, a reinforced fan, high temperature seals, a heavy duty fan cover, and a motor design with circular fins as an option. TB Wood's Dura-Flex elastomeric couplings are often mounted between the drive motors and table rollers. The couplings provide superior fatigue resistance in tough steel mill environments. Units are easy to assemble, have a high operating temperature and are moisture and chemical resistant.

Bauer Gear Motor BF Series shaft-mounted gear motors

TB Wood's Dura-Flex® couplings

Ameridrives Amerigear® couplings (AGMA)

Delroyd Worm Gear Speed reducers

Nuttall Gear TDS/HPD parallel shaft and Moduline® concentric shaft reducers

Bibby Turboflex Series III couplings and modular torque limiters

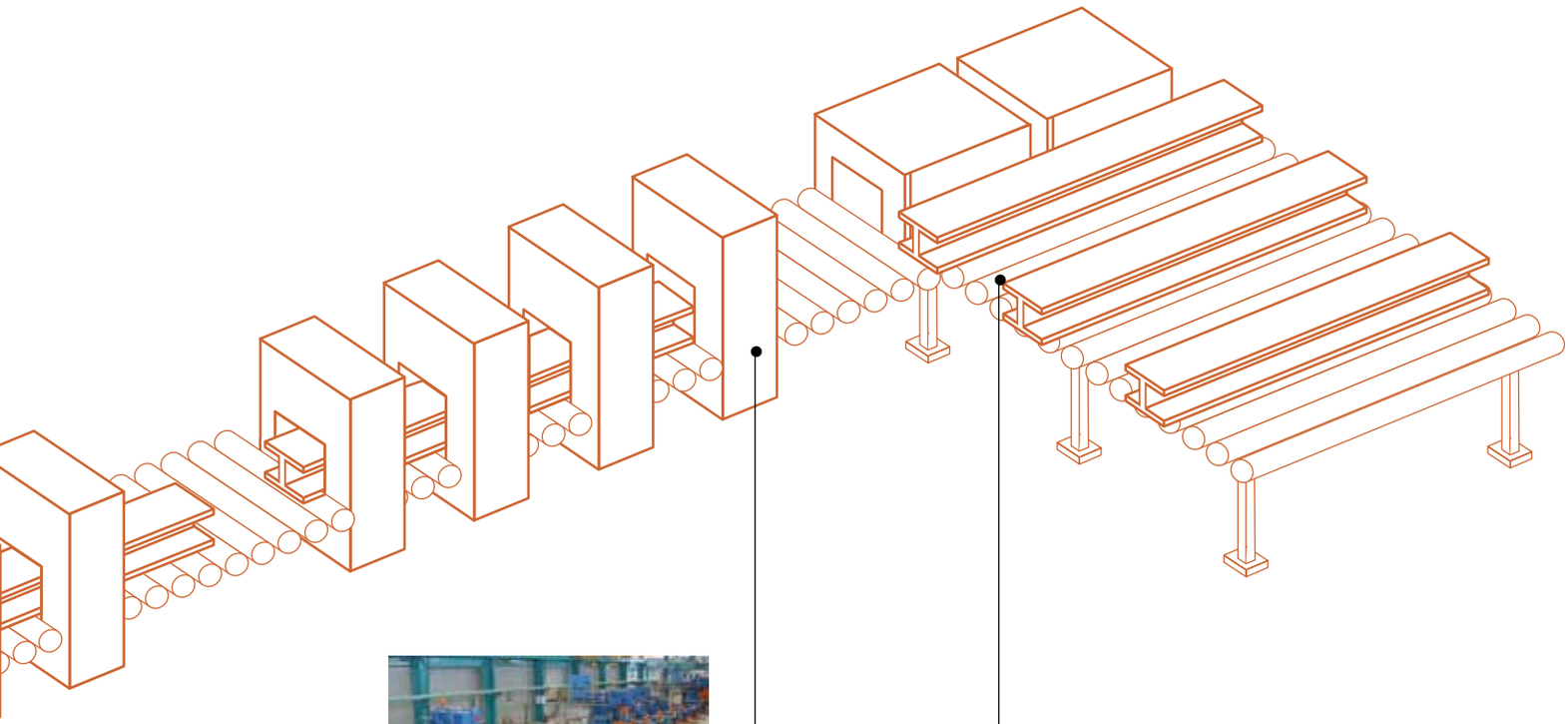

Finishing Mills

Ameridrives Power Transmission universal joints and Ameridrives SM Series mill spindles are designed for heavy-load, continuous-duty bar mill applications. The spindles feature Ameridrives fully-crowned advanced gear tooth design. Units can accommodate high misalignment angles due to the constant change in material thickness, roll size and roll change requirements. Caliper brakes and pinion mill stand drives are also used.

Ameridrives Power Transmission Americardan 5000 & 3000 Series universal joints

Ameridrives Amerigear® couplings (AGMA) and SM Series mill spindles

Twiflex Limited MX pneumatic caliper disc brakes

Nuttall Gear Pinion and twin pinion mill stand drives

Bibby Turboflex Series III couplings and modular torque limiters

Delroyd Worm Gear Mill stand adjustment drives

Transfer Tables/Conveyors

TB Wood's QT Power chain II belt drive system features a synchronous belt, sprockets, bushings and idlers all designed to work together for maximum value in high torque drive applications including mill chain conveyors. Bauer gear motors and Bibby torque limiters are also utilized on chain driven conveyor systems through out the mill.

TB Wood's Dura-Flex® couplings and QT Power Chain® II belt drive system

Bauer Gear Motor BF Series shaft-mounted gear motors and BG Series helical in-line gear motors

Ameridrives Amerigear® couplings (AGMA)

Twiflex Limited MX pneumatic caliper disc brakes

Bibby Turboflex Series III couplings and Bibbigard torque limiters

Wichita Clutch AquaMaKKs™ clutches and brakes

Temper and Pipe Mills

Temper Mills

Ameridrives SM Series mill spindles are designed for long lasting performance in heavy-load, temper mill applications. The spindles feature Ameridrives fully-crowned advanced gear tooth design. Units can accommodate high misalignment angles due to the constant change in material thickness, roll size and roll change requirements. Caliper brakes and pinion mill stand drives are also used.

Ameridrives Power Transmission Americardan 5000 & 3000 Series universal joints

Ameridrives Amerigear® couplings (AGMA) and SM Series mill spindles

Bibby Turboflex Series III couplings

Twiflex Limited MX pneumatic caliper disc brakes

Nuttall Gear Pinion and twin pinion mill stand drives

Delroyd Worm Gear Mill stand screwdowns and adjustment drives

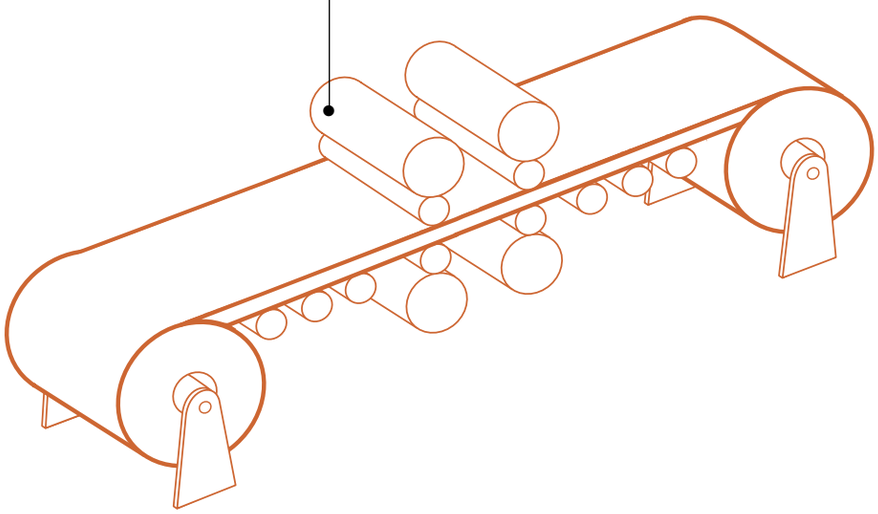

Piercing Pipe Mills

Ameridrives Power Transmission universal joints are installed between the drive motors and rollers on the piercing mill. Bauer Gear Motors and Bibby Turboflex couplings can be used on mill rollout tables.

Ameridrives Power Transmission Americardan 5000 & 3000 Series universal joints

Bauer Gear Motor BG Series helical gear motors

Bibby Turboflex E-Flex couplings and modular torque limiters

Delroyd Worm Gear Speed reducers

Nuttall Gear Helical speed reducers

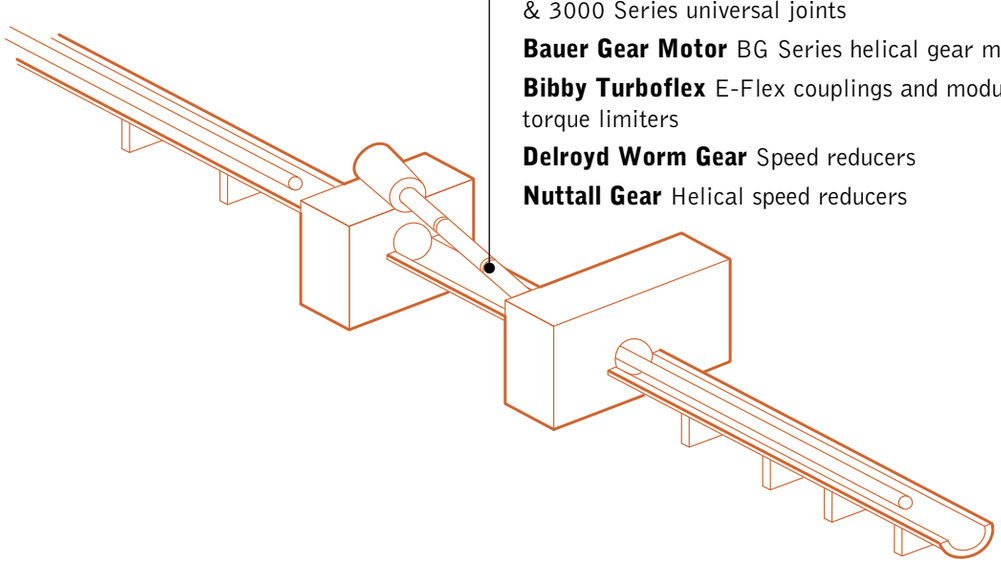

Cold Rolling Mills

Cold Mills

Due to superior engineering and mill expertise, Ameridrives Power Transmission universal joints often replace gear mill spindles on cold mill applications. Amerigear® gear couplings are often mounted between the drive motors and gear boxes. The couplings provide superior performance in tough steel mill environments. Nuttall Gear helical drives and Delroyd Worm Gear speed reducers are widely used on cold mill applications.

Ameridrives Power Transmission Americardan 5000 & 3000 Series universal joints

Ameridrives Amerigear® couplings (AGMA)

Delroyd Worm Gear Speed reducers

Nuttall Gear TDS/HPD parallel shaft and Moduline® concentric shaft reducers

Bibby Turboflex Series III couplings and modular torque limiters

Ameridrives Ameriloc® shaft locking devices

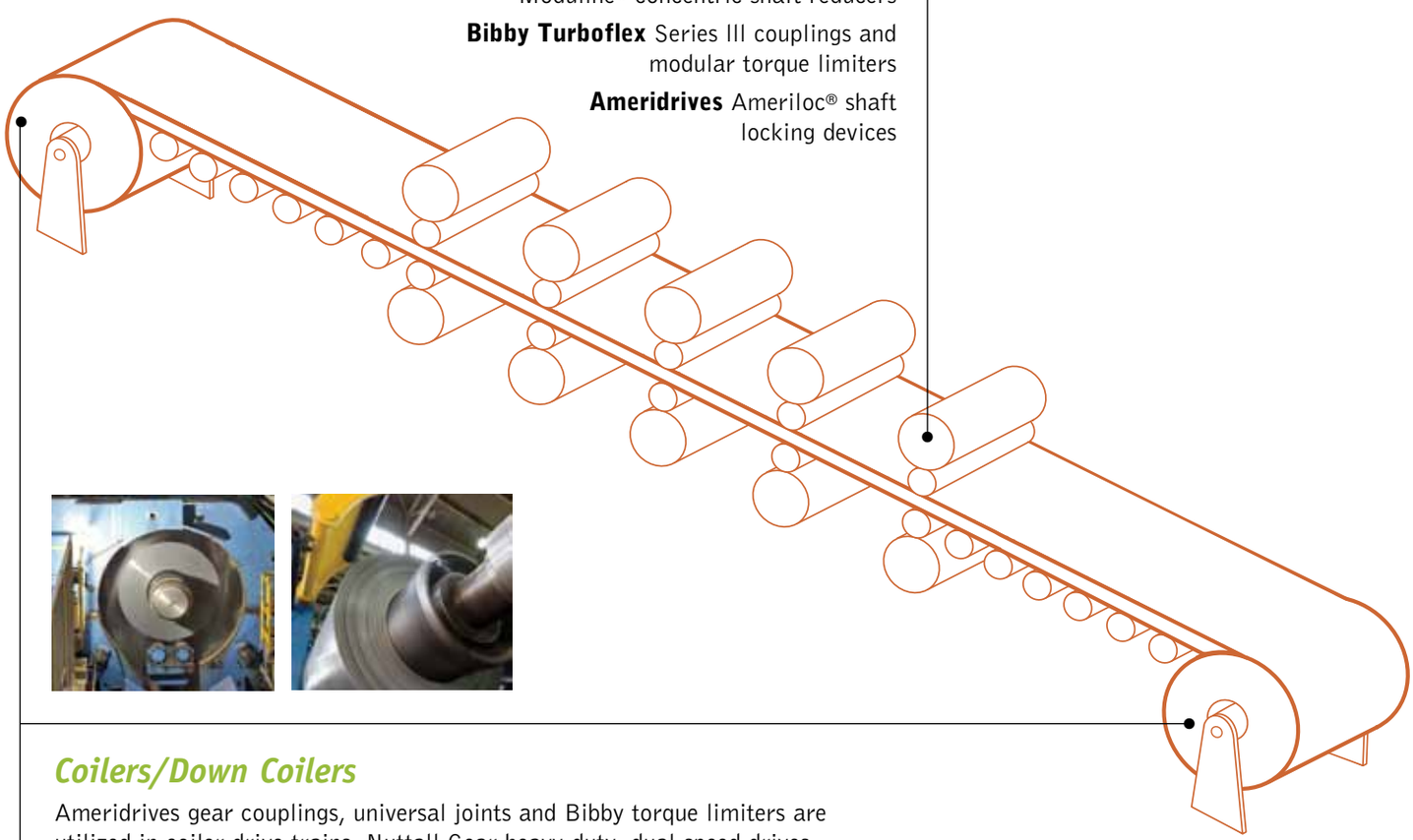

Coilers/Down Coilers

Ameridrives gear couplings, universal joints and Bibby torque limiters are utilized in coiler drive trains. Nuttall Gear heavy-duty, dual-speed drives are custom-designed with customer-specified mandrel shafts for optimum performance in down coiler applications.

Ameridrives Power Transmission Americardan 5000 & 3000 Series universal joints

Ameridrives Amerigear® couplings (AGMA)

Nuttall Gear Two-speed recoiler drive

Bibby Turboflex Series III couplings and modular torque limiters

Wichita Clutch AquaMaKKs™ clutches and brakes

Delroyd Worm Gear Speed reducers

Twiflex Limited MXEA electric caliper brakes and MX pneumatic caliper disc brakes

Check Out
www.AltraMetalProducers.com and
www.AltraMetalProcessing.com

The websites offer the global metals industries convenient, 24-hour access to the Altra brands, products and applications critical to virtually every operation in metal mills and metal processing facilities.

The websites are organized by application categories ranging from continuous casters and hot roughing mills to cold mills and pickling, coating and annealing lines.

Within these categories are the features and benefits of each Altra product solution that can be applied to improve efficiency, productivity and safety in the metal mill or processing operation. Each product contains a web link to one of the 11 Altra brands that support the Metals industry where engineers can access detailed product specifications. The websites also contain case studies and a literature portal.

Altra Industrial Motion

All Customer Service phone numbers shown in bold

Electromagnetic Clutches and Brakes

Warner Electric

Electromagnetic Clutches and Brakes

New Hartford, CT - USA
1-800-825-6544

For application assistance: 1-800-825-9050

St Barthelemy d'Anjou, France
+33 (0) 2 41 21 24 24

Precision Electric Coils and Electromagnetic Clutches and Brakes

Columbia City, IN - USA
1-260-244-6183

Matrix International

Electromagnetic Clutches and Brakes, Pressure Operated Clutches and Brakes

Brechin, Scotland
+44 (0) 1356 602000

New Hartford, CT - USA
1-800-825-6544

Inertia Dynamics

Spring Set Brakes; Power On and Wrap Spring Clutch/Brakes

New Hartford, CT - USA
1-800-800-6445

Linear Products

Warner Linear

Linear Actuators

Belvidere, IL - USA
1-800-825-6544

For application assistance: 1-800-825-9050

St Barthelemy d'Anjou, France
+33 (0) 2 41 21 24 24

Couplings

Ameridrives Couplings

Mill Spindles, Ameriflex, Ameridisc

Erie, PA - USA
1-814-480-5000

Gear Couplings

San Marcos, TX - USA
1-800-458-0887

Bibby Turboflex

Disc, Gear, Grid Couplings, Overload Clutches

Dewsbury, England
+44 (0) 1924 460801

Boksburg, South Africa
+27 11 918 4270

TB Wood's

Elastomeric Couplings

Chambersburg, PA - USA
1-888-829-6637– Press #5

For application assistance: 1-888-829-6637 – Press #7

General Purpose Disc Couplings

San Marcos, TX - USA
1-888-449-9439

Ameridrives Power Transmission

Universal Joints, Drive Shafts, Mill Gear Couplings

Green Bay, WI - USA
1-920-593-2444

Huco Dynatork

Precision Couplings and Air Motors

Hertford, England
+44 (0) 1992 501900

Chambersburg, PA - USA
1-800-829-6637

Lamiflex Couplings

Flexible Couplings, Bearing Isolators, and Coupling Guards

São Paulo, SP - Brasil
(11) 5679-6533

Altra Industrial Motion (Changzhou) Co., Ltd.

Universal Joints, Gear Couplings, Ameriflex and Ameridisc Couplings

Changzhou, Jiangsu Province - China
+86 519 8510 3020

Heavy Duty Clutches and Brakes

Wichita Clutch

Pneumatic Clutches and Brakes

Wichita Falls, TX - USA
1-800-964-3262

Bedford, England
+44 (0) 1234 350311

Twiflex Limited

Caliper Brakes and Thrusters

Twickenham, England
+44 (0) 20 8894 1161

Industrial Clutch

Pneumatic and Oil Immersed Clutches and Brakes

Waukesha, WI - USA
1-262-547-3357

Gearing

Boston Gear

Enclosed and Open Gearing, Electrical and Mechanical P.T. Components

Charlotte, NC - USA
1-800-825-6544

For application assistance: 1-800-816-5608

Bauer Gear Motor

Geared Motors

Esslingen, Germany
+49 (711) 3518 0

Somerset, NJ - USA
1-732-469-8770

Nuttall Gear and Delroyd Worm Gear

Worm Gear and Helical Speed Reducers

Niagara Falls, NY - USA
1-716-298-4100

Overrunning Clutches

Formsprag Clutch

Overrunning Clutches and Holdbacks

Warren, MI - USA
1-800-348-0881– Press #1

For application assistance: 1-800-348-0881 – Press #2

Marland Clutch

Roller Ramp and Sprag Type Overrunning Clutches and Backstops

South Beloit, IL - USA
1-800-216-3515

Stieber Clutch

Overrunning Clutches and Holdbacks

Heidelberg, Germany
+49 (0) 6221 30 47 0

Belted Drives and Sheaves

TB Wood's

Belted Drives

Chambersburg, PA - USA
1-888-829-6637 – Press #5

For application assistance: 1-888-829-6637 – Press #7

Engineered Bearing Assemblies

Kilian Manufacturing

Engineered Bearing Assemblies

Syracuse, NY - USA
1-315-432-0700

For information concerning our *sales offices* in Asia Pacific check our website www.altramotion.com.cn

Altra® Industrial Motion

www.altramotion.com

300 Granite Street • Braintree, MA 02184 - USA P-7404-C 9/13 Printed in USA